MOEN®
COMMERCIAL

Specifications

FAUCET DESCRIPTION
- Metal construction with chrome plated finish
- 1/2" IPS connections
- Supplied with vandal resistant screws

OPERATION
- 4" Wrist blade style handles with hot and cold color indicators
- Rotate the hot side handle 1/4 turn counterclock wise to open (clockwise to close) and rotate the cold side handle 1/4 turn clockwise to open (counterclockwise) to close

FLOW
- 2.2 MAX. gpm (8.3 L/min) aerator

CARTRIDGE
- 1224 cartridge design
- Nonmetallic and stainless steel material

STANDARDS
- Third party certified by CSA to meet CSA B-125 and ASME A112.18.1M and all applicable specifications referenced therein and complies with the requirements of ANSI A117.1, NSF 61/9, and California Proposition 65.

WARRANTY
- Warranted for 5 years against material or manufacturing defects

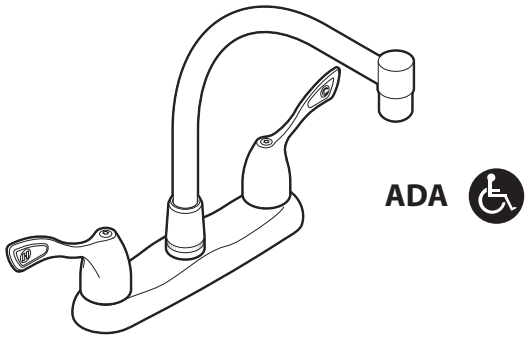

ADA

Two-Handle Kitchen Faucet

Model: 8799

NOTE: Designed to be installed through 3 holes - 1" min. dia. and on 4" centers

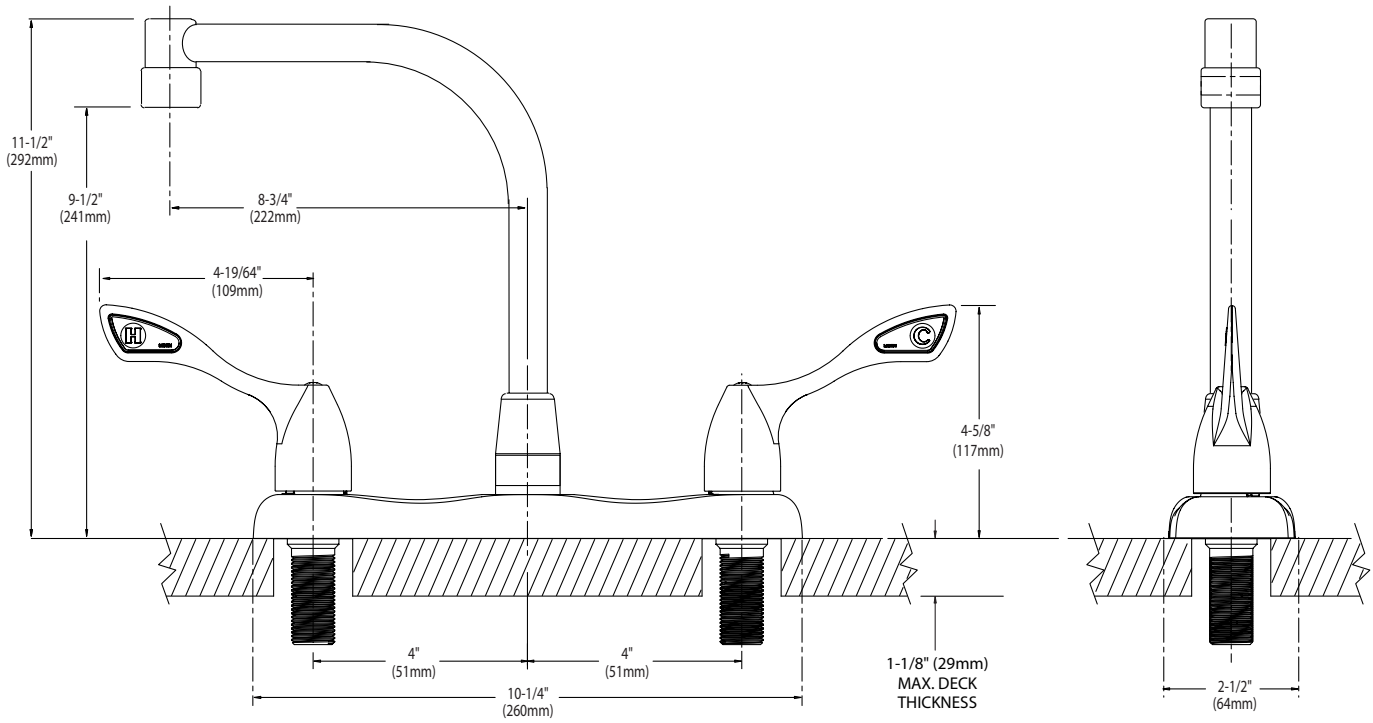

CRITICAL DIMENSIONS

(DO NOT SCALE)